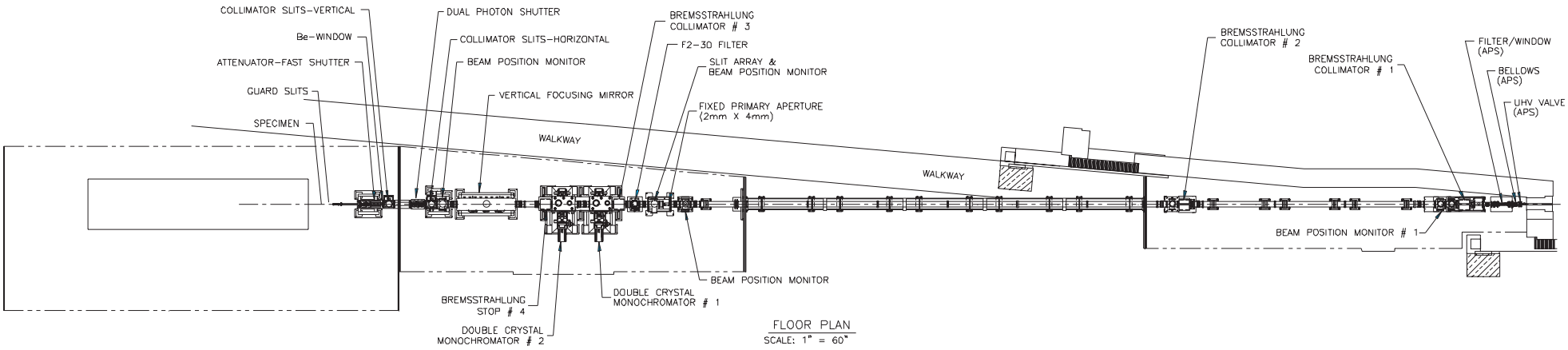

FLOOR PLAN
SCALE: 1" = 60"

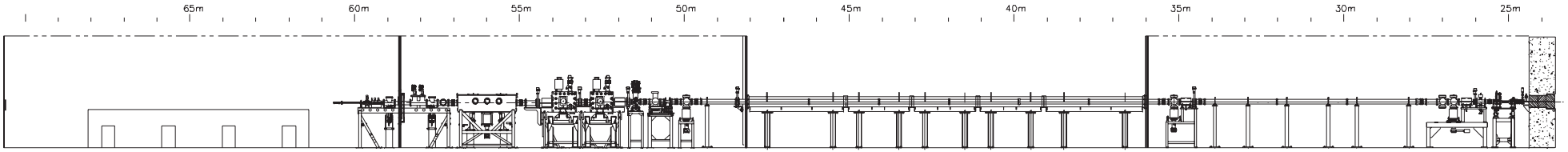

ELEVATION
SCALE: 1 = 60

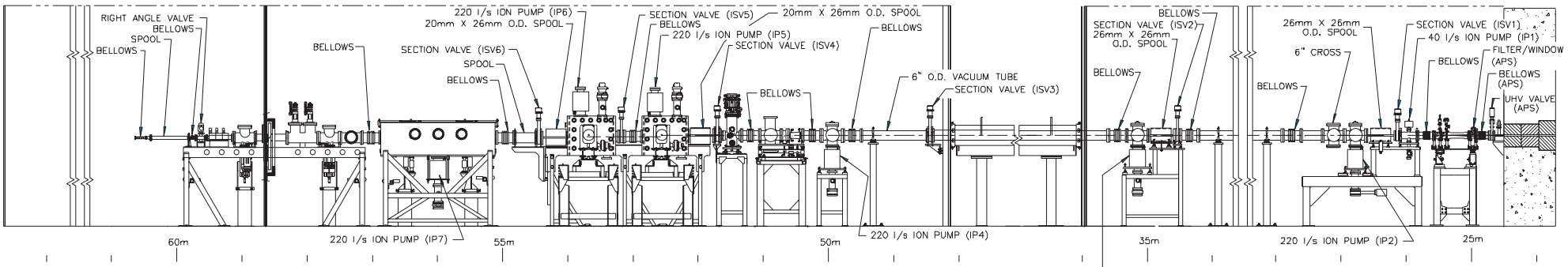

ENLARGED ELEVATION–PARTIAL VIEWS
SCALE: 1" = 30"