ZETA Drive Compumotor

DIP Switch Settings for ZETA Motors* (for complete DIP Switch Table *see page 14*)

SERIES	PARALLEL
ZETA57-51S	ZETA57-51P
ZETA57-83S	ZETA57-83P
ZETA57-102S	ZETA57-102P
ZETA83-62S	ZETA83-62P
ZETA83-93S	ZETA83-93P
ZETA83-135S	ZETA83-135P

*Configured for 25,000 steps/rev, -4% 3rd harmonic, S&D indexer, anti-res. enabled, auto standby off

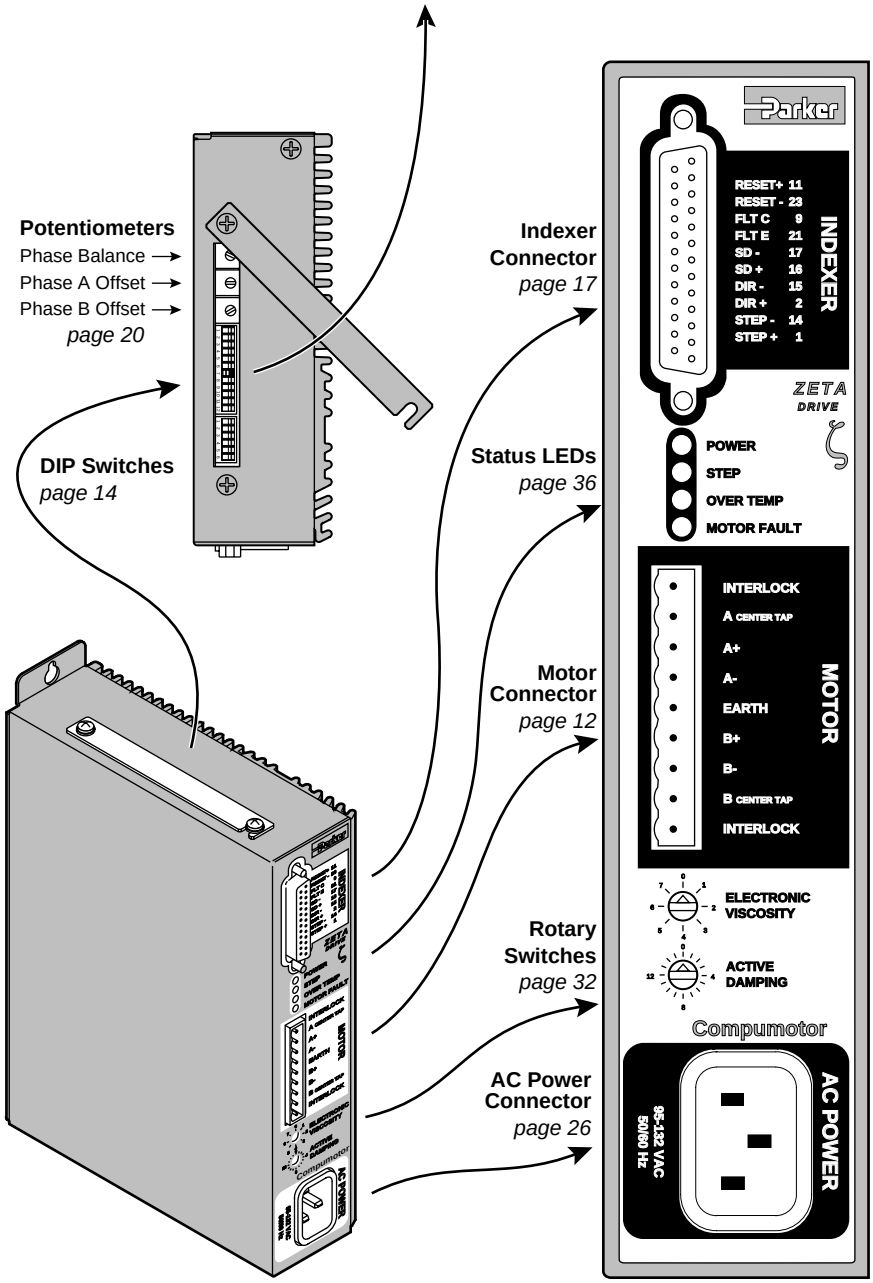

Inputs & Outputs *see page 17*

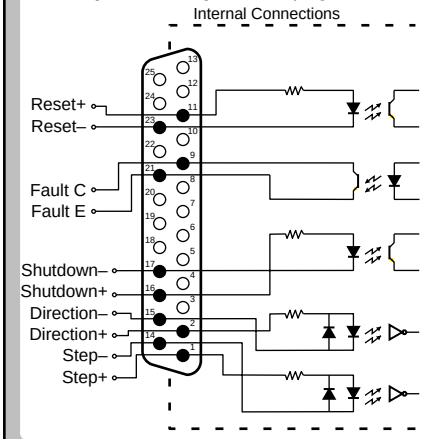

Status LEDs *see page 36*

POWER	Green when power is on
STEP	Green when drive receives step Flashes Red/Green in auto test
OVER TEMP	Red indicates over temp fault
MOTOR FAULT	Red when drive detects short circuit in motor or motor cable; Red if interlock is open

Motor Wiring – ZETA Motor Color Code

see page 12

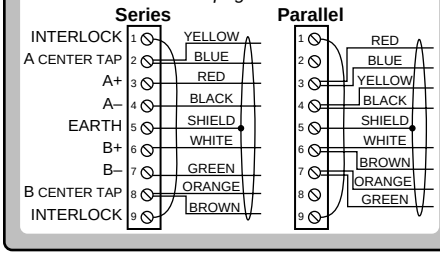

Damping in the ZETA Drive *see page 29*

Anti-Resonance *pg 30*	Operates at speeds > 3 rps Enabled if DIP SW2-#2 is off
Electronic Viscosity *pg 31*	Operates from zero to 3 rps. Disabled if rotary sw set at 0
Active Damping *pg 30*	Operates at speeds > 3 rps Disabled if rotary sw set at 0 Maximum setting based on total inertia–see table below

Active Damping Configuration – Inertia Table

Switch Position #	Total Inertia kg-m2 x 10-6	Total Inertia oz-in2
15	8.8 – 20.5	0.481 – 1.121
14	20.5 – 57.2	1.121 – 3.144
13	57.2 – 106.9	3.127 – 5.845
12	106.9 – 175.4	5.845 – 9.590
11	175.4 – 272.7	9.590 – 14.910
10	272.7 – 371.5	14.910 – 20.312
9	371.5 – 502.0	20.312 – 27.447
8	502.0 – 627.5	27.447 – 34.308
7	627.5 – 804.5	34.308 – 43.986
6	804.5 – 959.5	43.986 – 52.460
5	959.5 – 1176	52.460 – 64.297
4	1176 – 1425	64.297 – 77.884
3	1425 – 1590	77.884 – 86.905
2	1590 – 1777	86.905 – 97.129
1	1777 – 2057	97.129 – 112.465
0	Active Damping Disabled	